DRILL DIAMETER AND ANCHOR BOLTS NOTES:

WHERE 9/16–INCH DIAMETER HOLES ARE PROVIDED USES SIMPSON TITAN HD MECHANICAL ANCHORS, ½" X 10" LONG, MINIMUM 8–INCH EMBEDMENT INTO STEM WALL.

WHERE 11/16–INCH DIAMETER HOLES ARE PROVIDED, USE 5/8 X 10 MECHANICAL ANCHORS, SIMPSON WEDGE–ALL, OR APPROVED EQUAL, WITH MINIMUM 8–INCH EMBEDMENT IN STEM WALL.

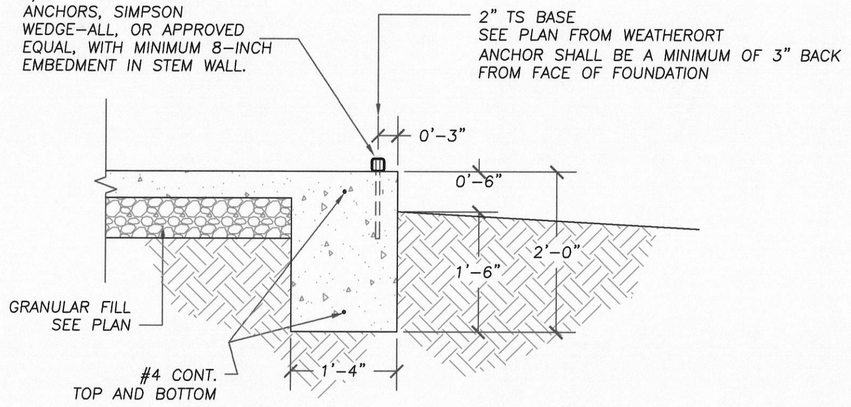

1 TYPICAL FOOTING DETAIL
SCALE: 3/4 =1'–0"

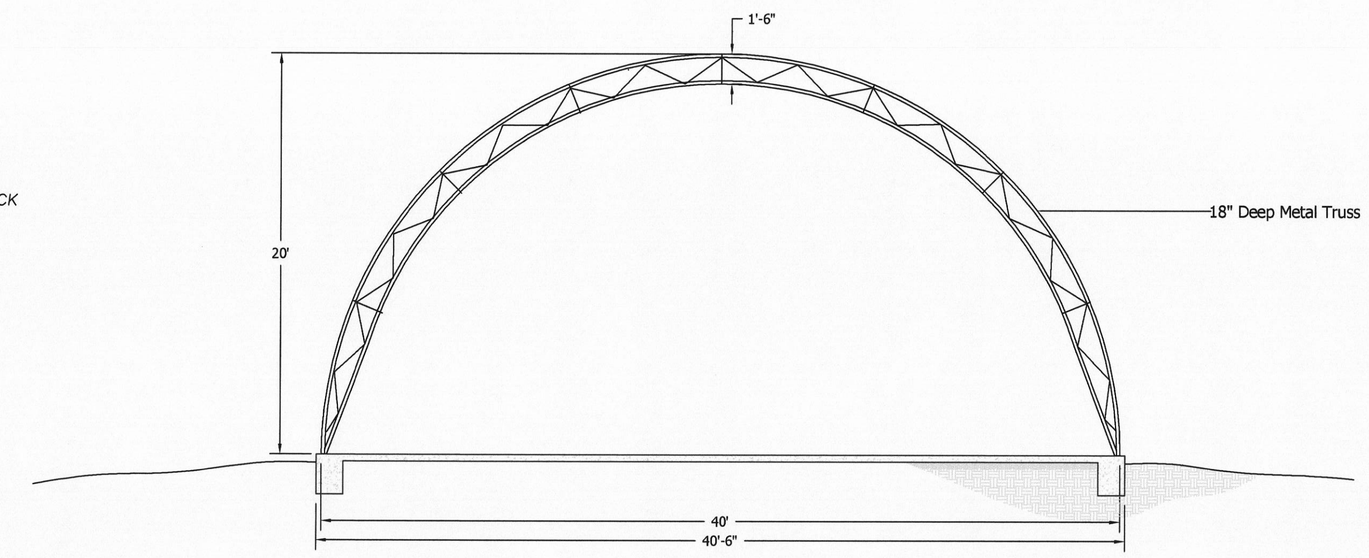

END VIEW
Scale: 3/16" = 1'-0"

GENERAL PROJECTS NOTES

1. GENERAL

A) THESE GENERAL NOTES SHALL APPLY TO THE STRUCTURAL DRAWINGS UNLESS OTHERWISE SHOWN OR NOTED
B) UNLESS OTHERWISE INDICATED, ALL DETAILS OF DESIGN, WORKMANSHIP AND MATERIALS SHALL CONFORM TO:

2012 INTERNATIONAL BUILDING CODE (IBC)
2012 INTERNATIONAL RESIDENTIAL CODE (IBC)
2012 UNIFORM MECHANICAL CODE
2012 UNIFORM PLUMBING CODE
2011 NATIONAL ELECTRICAL CODE
2012 INTERNATIONAL FIRE CODE
2009 INTERNATIONAL ENERGY CONSERVATION CODE

An automatic fire alrm system shall be installed by a licensed fire alarm contractor and shall meet the requirements of NFPA 72 and shall provide complete coverage in all areas of the building. Plans and specifications for the systems shall be submitted to MVFPD for review prior to the commencement of any and all work. The fire alarm system shall be electronically supervised to a central station fire alarm company.

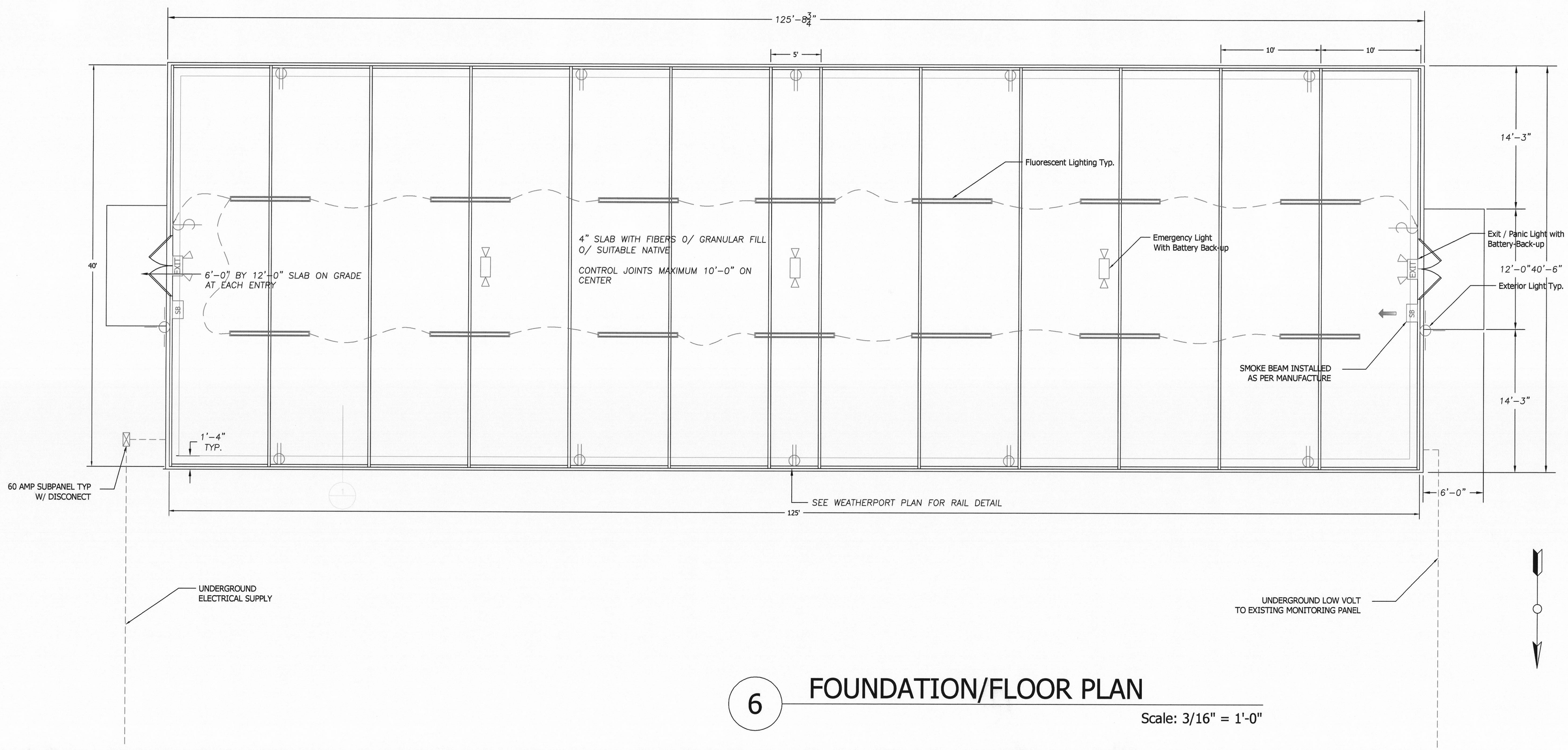

6 FOUNDATION/FLOOR PLAN
Scale: 3/16" = 1'-0"

NO.	DATE:	REVISION:

Prime West Construction
NV. LIC. 0067856
430 HWY 339 - YERINGTON NV. 89447 - 1-775-463-5173

NEW MEMBRANE STRUCTURE FOR
PERI AND SONS FARMS
8 EAST PURSEL LANE
YERINGTON NEVADA 89447

SCALE:	3/16" = 1'-0"
DATE:	4-2-18
DESIGNED BY:	JOHN MATTICE
CHECKED BY:	J.M.
DRAWING:	FLOOR
SHEET:	6.0 OF: 0.0